WELCOME TO MEERKATS!

Teachers and support team: Mrs Gurr, Mrs Wild and Mr Hunt

TIMETABLE

Bratton Primary School

Meerkats Class Timetable Term 1

	8:45-8:55	8:55 – 10:00	10:00 - 10:20	10:20-10:35	10:35 – 11:05	11:05 – 12:15	12:15-13:15	13:15 – 15:10			15:10-15:20
Monday	EMT registration	Maths (inc x tables/ number facts/ fluency)	ASSEMBLY	BREAK TIME	RWI Whole Class Reading/ Guided reading	English (inc SPAG/handwriting)	LUNCH	PSHE	Music	French	CLASS STORY
Tuesday	EMT registration	Maths (inc x tables/ number facts/ fluency)	ASSEMBLY	BREAK TIME	RWI Whole Class Reading/ Guided reading	English (inc SPAG/handwriting)	LUNCH	Art	Art		CLASS STORY
Wednesday	EMT registration	Maths (inc x tables/ number facts/ fluency)	ASSEMBLY	BREAK TIME	RWI Whole Class Reading/ Guided reading	English (inc SPAG/handwriting)	LUNCH	History		History	CLASS STORY
Thursday	EMT registration	Maths (inc x tables/ number facts/ fluency)	ASSEMBLY	BREAK TIME	RWI Whole Class Reading/ Guided reading	English (inc SPAG/handwriting)	LUNCH	PE	Computing		CLASS STORY
Friday	EMT registration	Maths (inc x tables/ number facts/ fluency)	ASSEMBLY	BREAK TIME	RWI Whole Class Reading/ Guided reading	English (inc SPAG/handwriting)	LUNCH	PE	RE		CLASS STORY

WRITING

- To inspire and challenge all our writers we use 'The Write Stuff' writing program.

Jane Considine Education

WHAT DOES THE LEARNING LOOK LIKE?

Sentence stacking

Experience days

Independent Writing

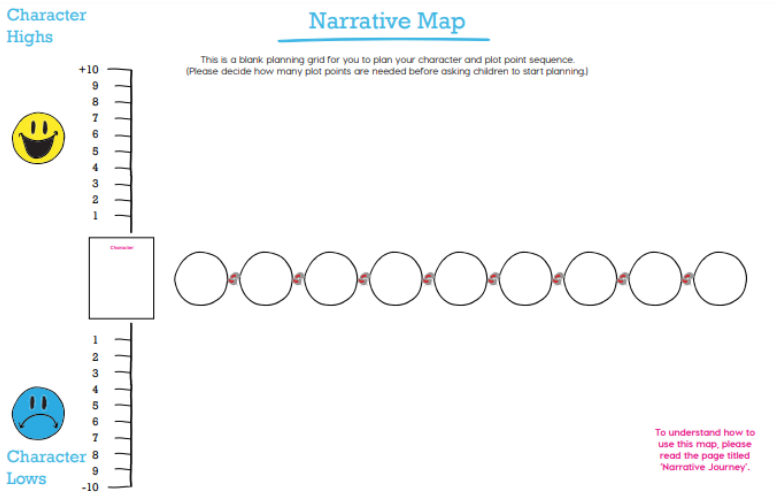

	Initiate	Model	Enable
Learning chunk 1	**Precise verbs** • Share the image of the plane spluttering to a halt and play a soundtrack of a crash. • Gather a bank of actions words for 'crashing' onto the moon – banging, thudding, smashing, clanging, clattering.	**Precise verbs** Teacher model: Crash! Bang! Thud! A spaceship crashed onto the moon.	**Precise verbs** Pupils to repeat the three onomatopoeic words used at the start of their stories (the toy cupboard) and choose an ambitious word for 'crashed'. HA: Deepen the moment.
Learning chunk 2	**Simile** • Bring six green objects into the classroom – peas, herbs, leaf, grass, sprouts, cabbage. • Compile a bank of adjectives related to these objects – peas (shiny); herbs (fragrant); leaf (smooth); grass (soft); sprouts (hard); cabbage (bumpy).	**Simile** Teacher model: The alien was as green as a shiny pea.	**Simile** Create your own 'green' simile, using an adjective before the object. HA: Deepen the moment.
Learning chunk 3	**Question** • Share the picture of the alien's spaceship landing. • Using an enormous 'thinking bubble', brainstorm some internal thoughts questions for the boy – Who is this? What has happened? Why are we here? Where has that alien come from? Will he be my friend?	**Question** Teacher model: 'Who is this?' the boy thought.	**Question** Include an internal thought for the boy. HA: Deepen the moment.

*HA = Higher Attainers

WORDS YOU MIGHT HEAR…

Chotting

Kind Calling

Fantastics, gramatastics, boomtastics

Plot points

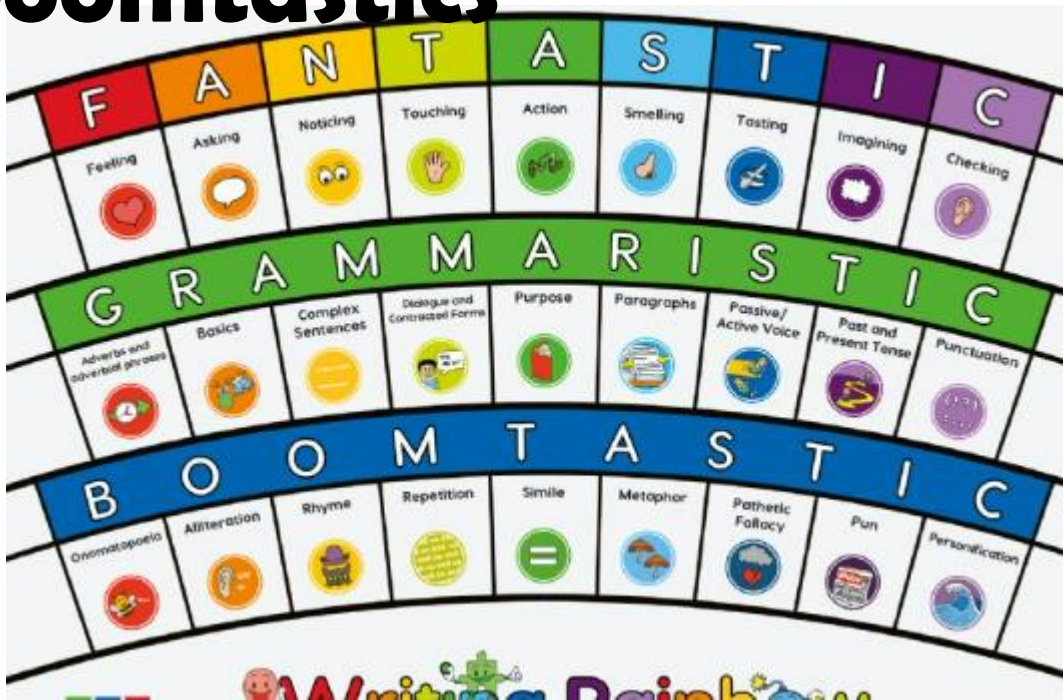

Sentence stacking yr 1

Monday 9th January

Plot point 4

Chotting Page.

Ideas for our sentences.

- Bad engine
- crashed
- landing. drooped.

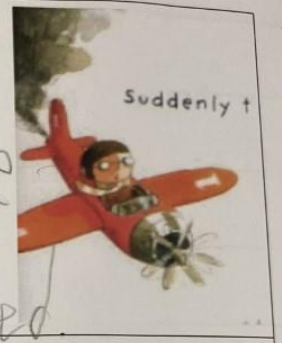

- yellow
- Big rocky
- gold huge

What shall I Do?
Why am I here?

suddenly the plane drooped. It had run out of petrol.

He landed on the huge, golden moon.

Why am I here The boy anxiously thought.

Sentence stacking yr 5

Thursday 5th January, 2022

Plot Point 1 - Paradise

Marine, bright, tranquil, fluffy, mesmerising, beautiful, light, sunny, magical, picturesque, light, blinding, lush.

Waving, dancing, floating, swirling, flying, shining, gliding, swaying, pirouetting, swirling, bouncing, dr...

grass, leaves, trees	birds
Scattering, rustling, waving, swaying, blowing, crunching, whistling, swishing, swooshing, dancing, creaking of branches	Tweeting, chirping, singing, whistling, twooling, cheeping, gliding, muttering, flapping, feathers rustling.

who loved little shop of horror...
who ~~to~~ was a big fan of all pla...
of size
who was only eleven years old
who was one with the plants
who was a nature nerd

Marty, who loved his plants like family, watered the myriad of flowers with the bees flying around his head.

Marty stared up at fluffy, lush clouds that danced across the ~~a~~ marine, water like sky ~~like~~ as gracefully as ballerinas. His attention was drawn the sweet singing of the birds high above him in the trees. He closed his eyes as the bees zipped and zoomed around him weaving through his arms and legs. Marty, who loved his plants like family, observed his poppies carefully.

MATHS

WHITE ROSE AND TEACHING FOR MASTERY.

	Week 1	Week 2	Week 3	Week 4	Week 5	Week 6	Week 7	Week 8	Week 9	Week 10	Week 11	Week 12
Autumn term	Number **Place value** FREE TRIAL VIEW		Number **Addition, subtraction, multiplication and division** VIEW					Number **Fractions A** VIEW		Number **Fractions B** VIEW		Measurement **Converting units** VIEW
Spring term	Number **Ratio** VIEW		Number **Algebra** VIEW		Number **Decimals** VIEW		Number **Fractions decimals and percentages** VIEW		Measurement **Area, perimeter and volume** VIEW		**Statistics** VIEW	
Summer term	Geometry **Shape** VIEW		Geometry **Position and direction** VIEW		**Themed projects, consolidation and problem solving** VIEW							

Fluency, Reason and problem solving.

a)

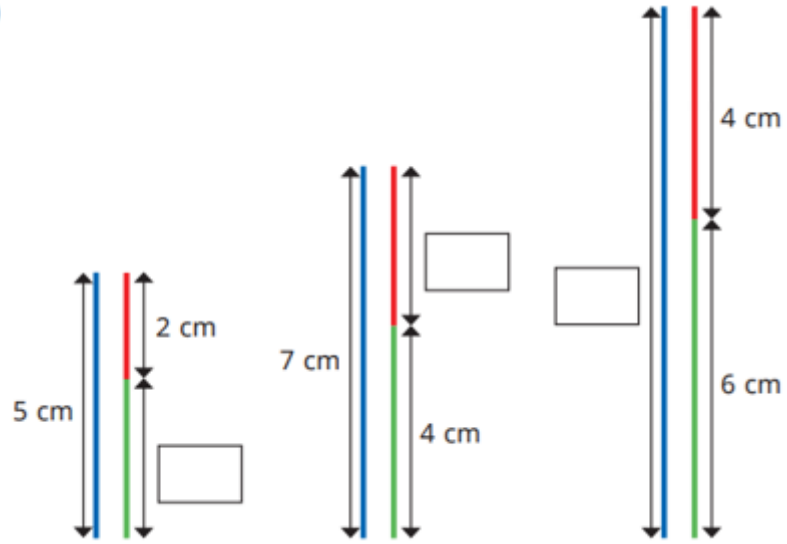

Work out the missing lengths.

a)

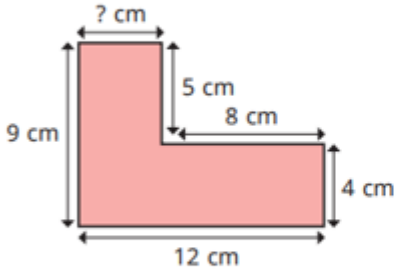

b)

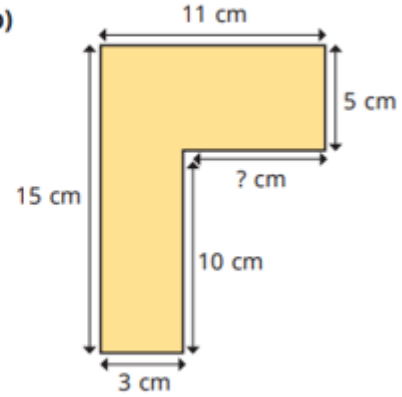

Max has drawn a rectilinear shape.

a) What do you notice about the lengths that have been circled?

b) What do you notice about the lengths that have been underlined?

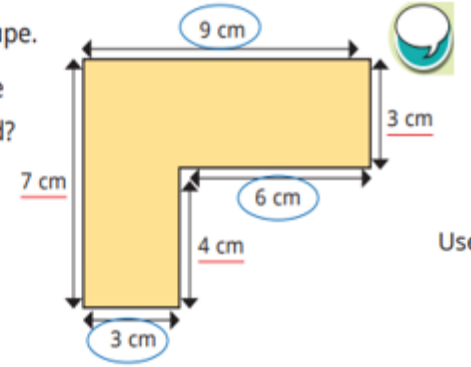

Tiny is trying to work out the lengths of A and B.

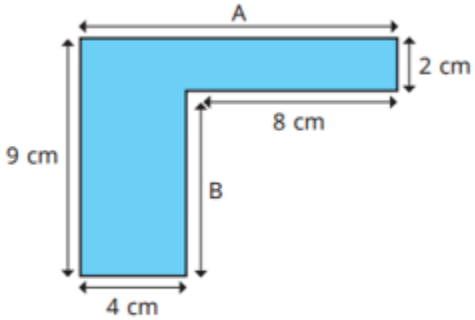

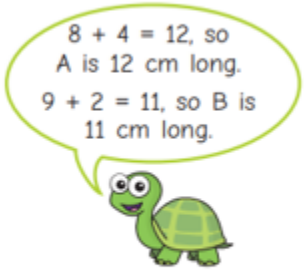

Do you agree with Tiny?

Explain your answer.

Use the clues to work out the unknown lengths.

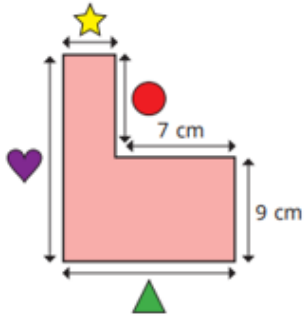

- ★ is half the size of ●
- ● is the second multiple of 3
- ▲ is equal to $\frac{2}{3}$ of ♥

Times tables

In year 6 we are focusing on revisiting all the times tables for those children that need further revision.

We use the Wiltshire method to teach times tables in class.

Children also all have access to TT Rockstars to practise at home.

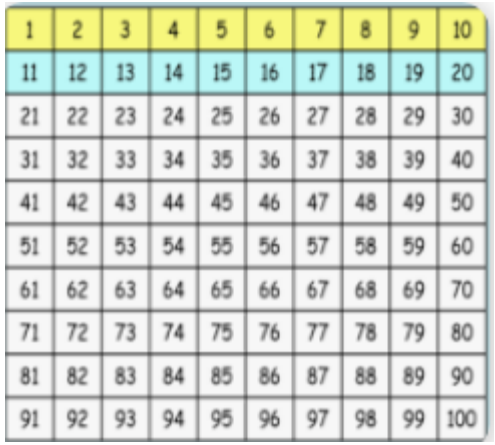

1	2	3	4	5	6	7	8	9	10
11	12	13	14	15	16	17	18	19	20
21	22	23	24	25	26	27	28	29	30
31	32	33	34	35	36	37	38	39	40
41	42	43	44	45	46	47	48	49	50
51	52	53	54	55	56	57	58	59	60
61	62	63	64	65	66	67	68	69	70
71	72	73	74	75	76	77	78	79	80
81	82	83	84	85	86	87	88	89	90
91	92	93	94	95	96	97	98	99	100

PE

Real PE is a unique, child centred approach that transforms how we teach PE to include, challenge and support EVERY child.

PE

- Our PE lessons will be on a Thursday and a Friday .
- This term we will be focusing on Tag Rugby and Tag Netball
- PE kit recap coming up.

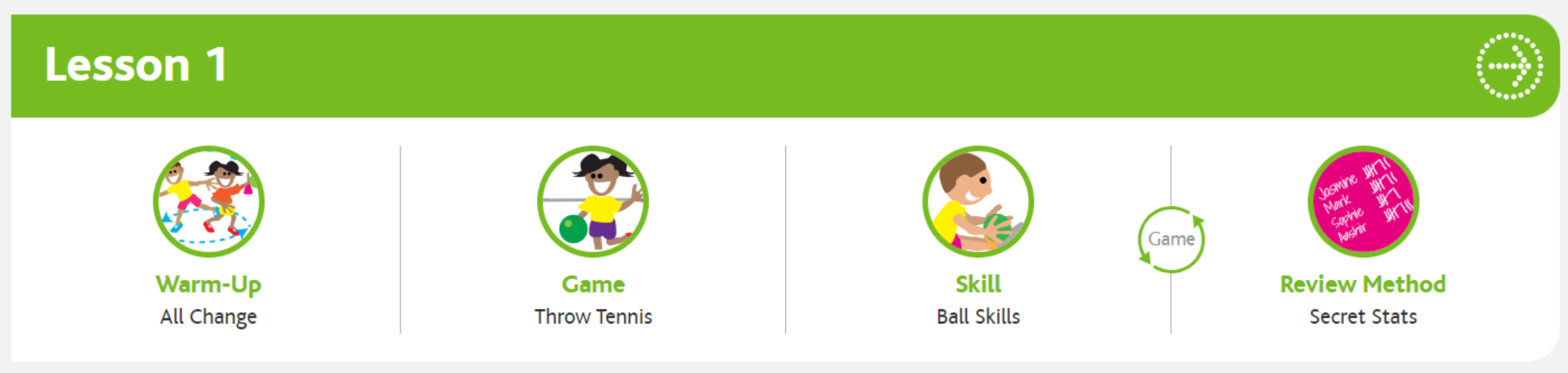

Science

We now use White Rose science to support our delivery of the curriculum. The White Rose Science curriculum has been selected because of its focus on supporting practical opportunities for science learning in all lessons.

Year 5/6 Electricity Construct and draw series circuits using symbols Complete and incomplete circuits Variations within circuits Plan, Investigate, Evaluate: Voltage experiment Renewable Energy Explore: What is renewable energy? Using renewable energy	**Year 5/6** Living thing and their habitats Explore: Conditions for life Grouping organisms Classifying animals Classifying plants Microorganisms Classifying organisms Carl Linnaeus	**Year 5/6** Properties of materials Test materials - magnetic, transparency and hardness Test materials - electrical conductivity Step 3 Plan, Test and Evaluate: Insulating heat experiment Explore: Uses of everyday materials - plastic, wood and metal	**Year 5/6** Space Explore: The solar system The planets Modelling Motion of the Earth and planets The solar system – ideas over time Planet Earth Night and day The Moon Global Warming. What is global warming? What is the impact of global warming on living things?	**Year 5/6** Reproducation A Explore: Sexual reproduction in animals Reproductive parts in plants Pollination Asexual reproduction Plan and Plant: Cloning plants experiment. Reversible and irreversible changes Exploring: Dissolving Separating materials - filtering and sieving Solutions and evaporating burning acid	**Year 5/6** Reversible and irreversible changes continued. Plastic pollution What is plastic pollution? What are the impacts of plastic pollution on the planet? Reproduction B Answer questions - cloning plants Present findings - cloning plants Evaluate - cloning plants

Wider curriculum

Subject	Autumn 1	Autumn 2	Spring 1	Spring 2	Summer 1	Summer 2
Big Question	What if the Mayans Never Existed?	What wonders does the world behold?	Does being powerful make you right?		Inequality – Is it fair to be rich?	Can what's been done be undone?
Theme focus	The Maya	The World	WW2		Brazil	Rainforests
Key Texts						

Homework

Reading is the key to the curriculum. There is a huge focus on reading in all year groups.
Please try to read with your child EVERY DAY.

Practice is key for times tables and number facts. All children will have a times tables rock stars login to practise at home and take part in whole school, local and national competitions.

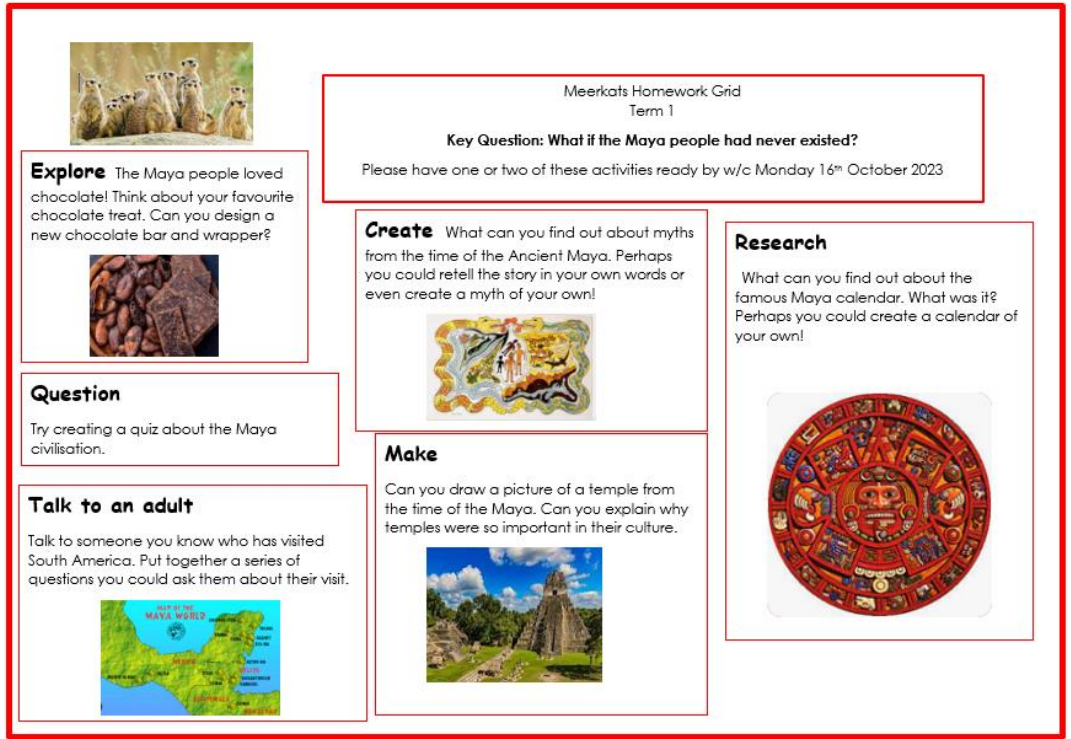

Meerkats Homework Grid
Term 1

Key Question: What if the Maya people had never existed?

Please have one or two of these activities ready by w/c Monday 16th October 2023

Explore The Maya people loved chocolate! Think about your favourite chocolate treat. Can you design a new chocolate bar and wrapper?

Question

Try creating a quiz about the Maya civilisation.

Talk to an adult

Talk to someone you know who has visited South America. Put together a series of questions you could ask them about their visit.

Create What can you find out about myths from the time of the Ancient Maya. Perhaps you could retell the story in your own words or even create a myth of your own!

Make

Can you draw a picture of a temple from the time of the Maya. Can you explain why temples were so important in their culture.

Research

What can you find out about the famous Maya calendar. What was it? Perhaps you could create a calendar of your own!

We have a broad and exciting curriculum that we hope your children is dying to share with you. Each term you will be provided with some optional hands on activities to explore our foundation subjects and wider curriculum further.

Your child will be screened on all the age appropriate spellings for their age group. You will receive a full list of the spellings that they are secure on and ones that may need more practice.

FOREST SCHOOL

Meerkats will be having forest school on Thursday in Term 3
(after Christmas)

POSITIVE BEHAVIOUR

We have 4 child friendly, simple rules

We are kind
We are respectful
We are honest
We are safe

Merits - certificates
Sparkle and shine

Uniform

For the school days and/or events the your child is representing the school at:
Red School Sweatshirt or Red Cardigan (with logo. REQUIRED)
White Polo-Shirt
Dark Grey Trousers or Skirts
Black School Shoes (not trainers) with Grey Plain Socks or Tights; (White Socks may be worn with skirts)
Optional Summer Uniform (Terms 5 & 6 only): Red Checked Summer Dress with White Socks or Dark Grey School Shorts with White Polo Shirt. Dresses may be worn with a Red Cardigan (with logo)

For P.E. and sports lessons:
Black Shorts and house colour T-Shirt and Trainers.
Plain Black/Dark Joggers and Sweatshirt or Tracksuit are recommended for outdoor P.E. during colder weather. No large logos.

For Forest school:
Wellington boots or similar appropriate footwear
Waterproofs and warm clothing (when appropriate)

Uniform with Logo may be purchased from SCHOLARS in Trowbridge.

Book Bags and Coats scribed with our school logo are available to purchase from the school office

AOB

- Water bottles
- Packed lunches and snacks
- Fidgets, toys etc
- After school clubs
- Pencil cases
- Trips and important dates for the year group

Upcoming parent workshops

KS2 Maths – 18th September

Hooke Court meeting- Friday 22nd September

Our class assembly will be happening on Tuesday 13th February.

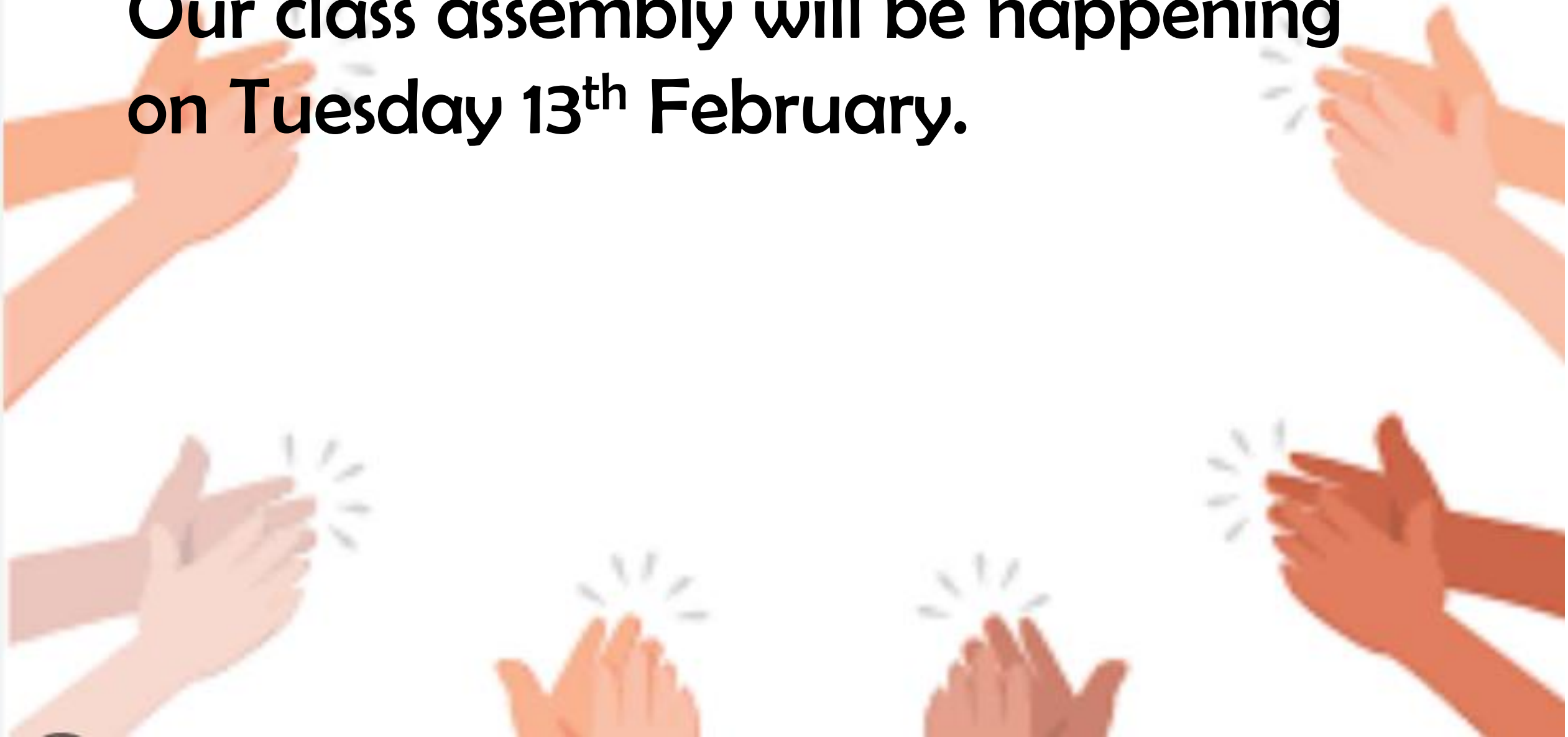

QUESTIONS?